RevNo	Revision note	Date	Signature	Checked

Pottyengineering Oil Can

Design Based on the Eagle66 Oil Can

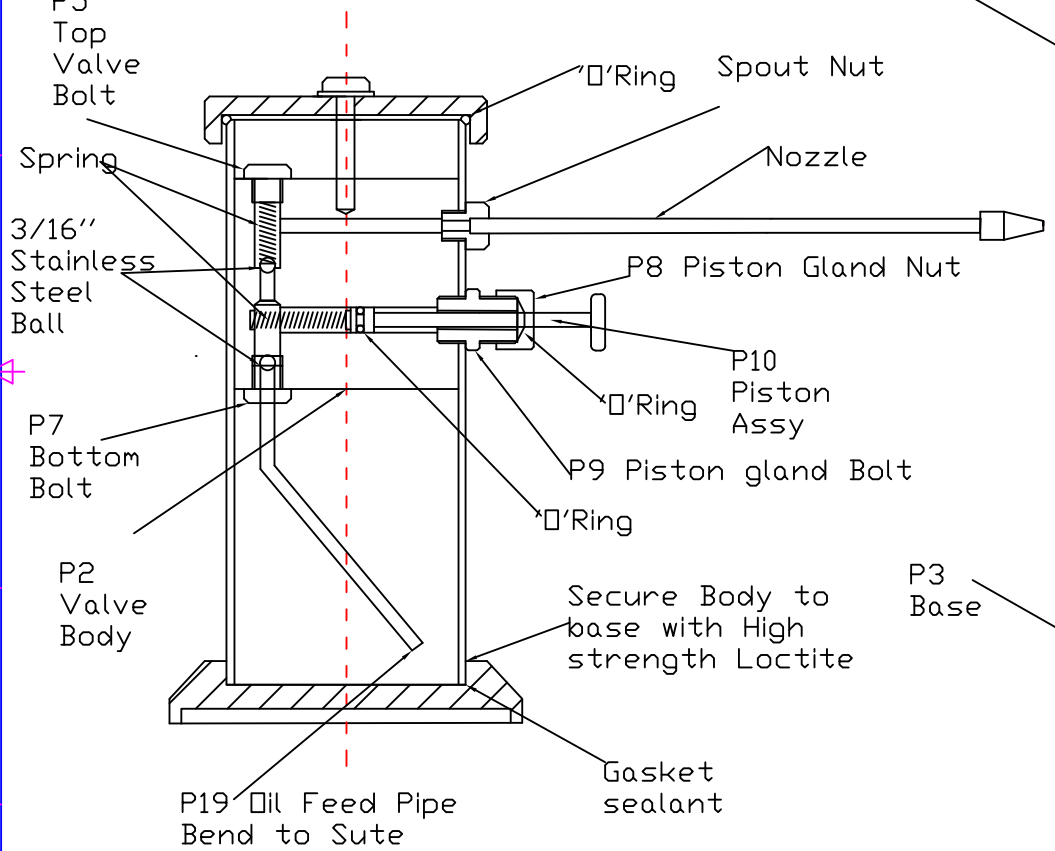

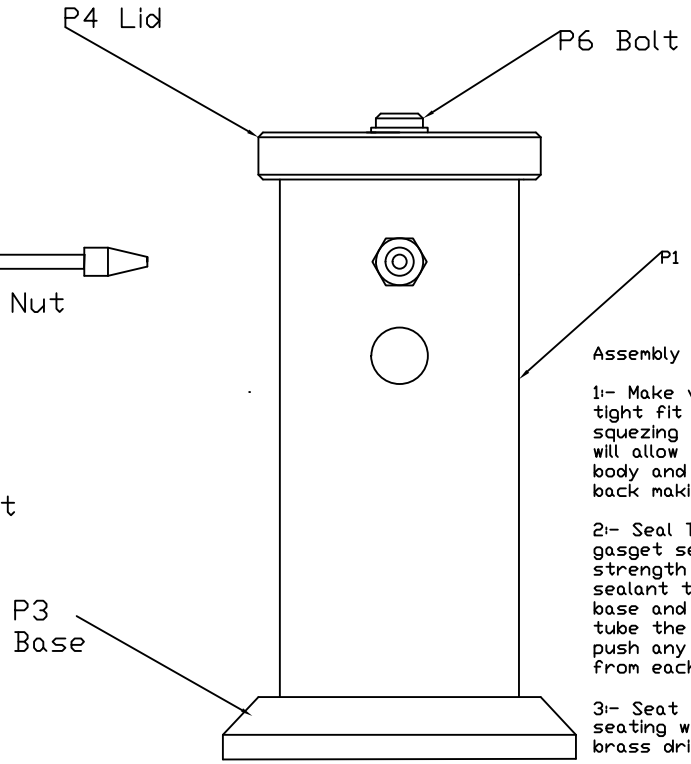

Assembly Notes:-

1:- Make valve body Part 2 a tight fit in body Part 1, squezing tube lightly in a vice will allow you assemble Valve body and the tube will spring back making a good oil seal

2:- Seal Tube into base using a gasget sealant and high strength loctite. Apply gasget sealant to the corner of the base and the loctite to the tube the assembly direction will push any surplace material away from each other.

3:- Seat 3/16" Ball onto there seating with a light tap via a brass drift from a hammer

Pottyengineering ©		
Stewart Hart	DATE Feb 2017	SCALE
TITLE Potty Oil Can		
	DRAWING_NUMBER	Sheet 1of2 SHEET

RevNo	Revision note	Date	Signature	Checked

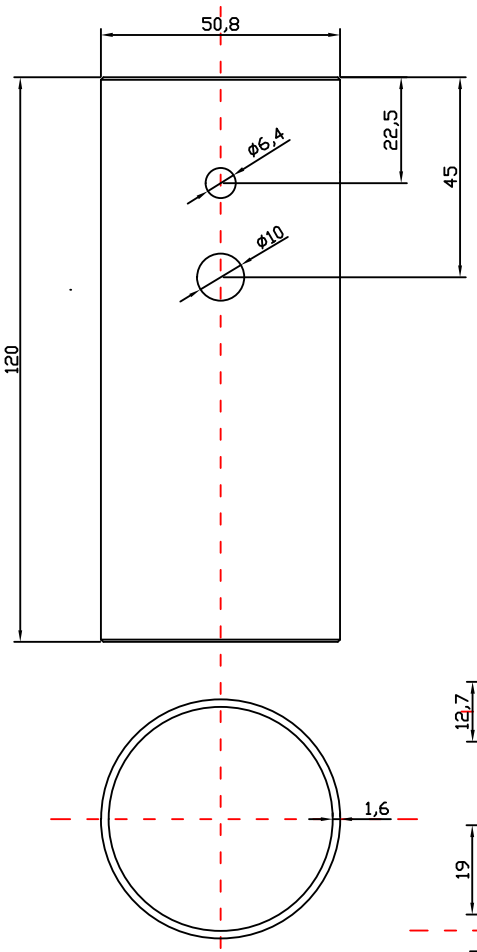

Part 1:- Body
Material 2"Dia*1.6mm
Aluminium Tube

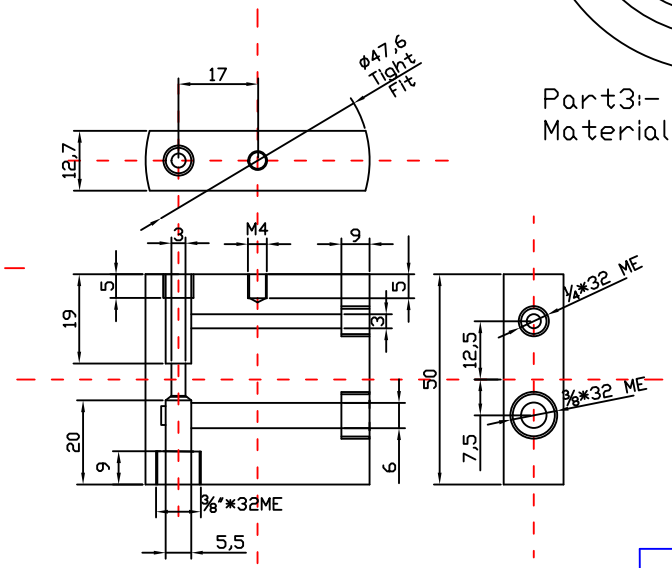

Part2:- Valve Body
Material Aluminium or Brass

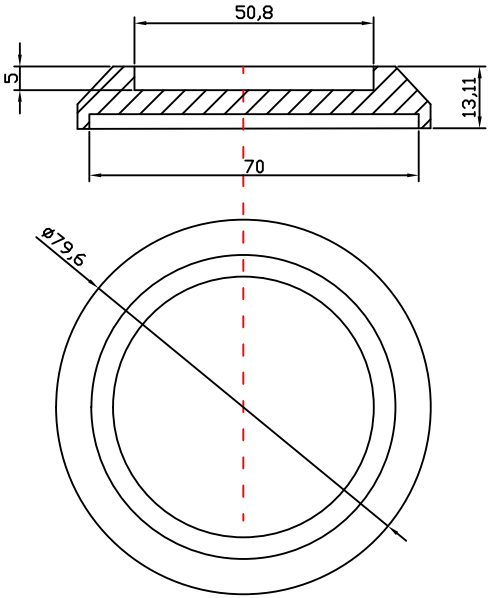

Part3:- Base
Material Aluminium

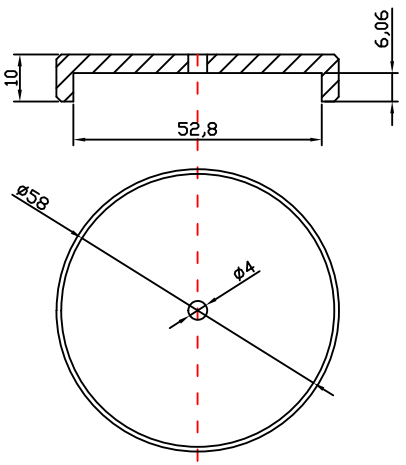

Part4:- Lid
Materil Aluminium

Pottyengineering ©			
Stewart Hart	DATE Feb 2017	SCALE	
TITLE Potty Oil Can			
	DRAWING_NUMBER	Sheet SHEET	2of3

RevNo	Revision note	Date	Signature	Checked

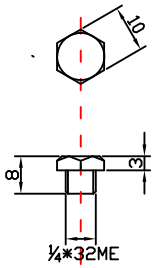

Part5:-
Top Vale
Bolt
Material
Brass

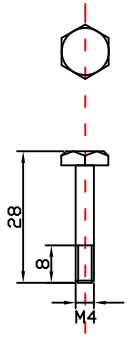

Part6:-lid Bolt
Material Brass

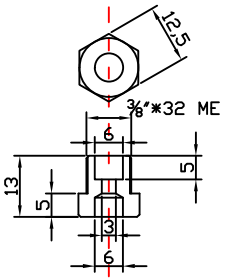

Part7:-
Bottom
Bolt
Material
Brass

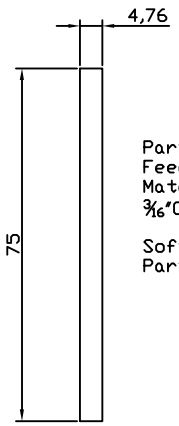

Part 19 Oil
Feed Pipe
Material
3/16"Copper Pipe

Soft solder to
Part 7

Part10:- Spout Assembly

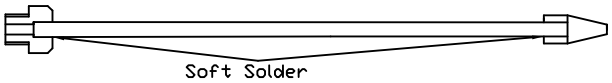

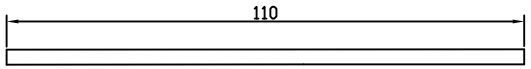

Part12:- Oil Tube
Material 5mm dia thin wall brass
tube

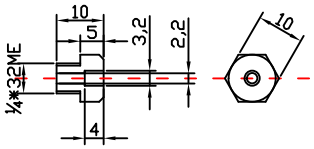

Part13:- Nozzle Nut
Material Brass

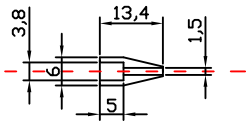

Part 15:-
Nozzle
Material Brass

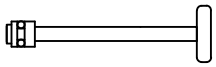

Part 15 Piston Assy

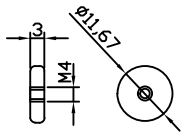

Part 18 Finger Pad
Material Brass

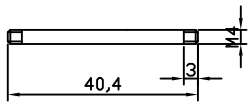

Part 16 Piston Rod
Material Steel

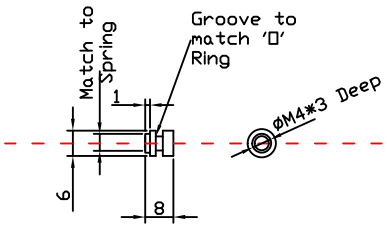

Part 17 Piston
Material Brass

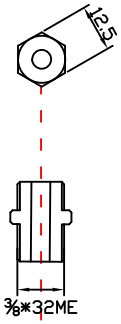

Part9:-Piston
Gland Bolt
Material
Brass

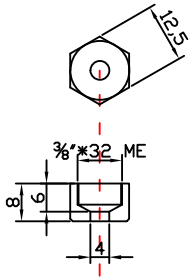

Part8:- Piston
Gland Nut
Material Brass

Pottyengineering ©		
Stewart Hart	DATE Feb 2017	SCALE
TITLE Potty Oil Can		
	DRAWING_NUMBER	Sheet 3of3 SHEET